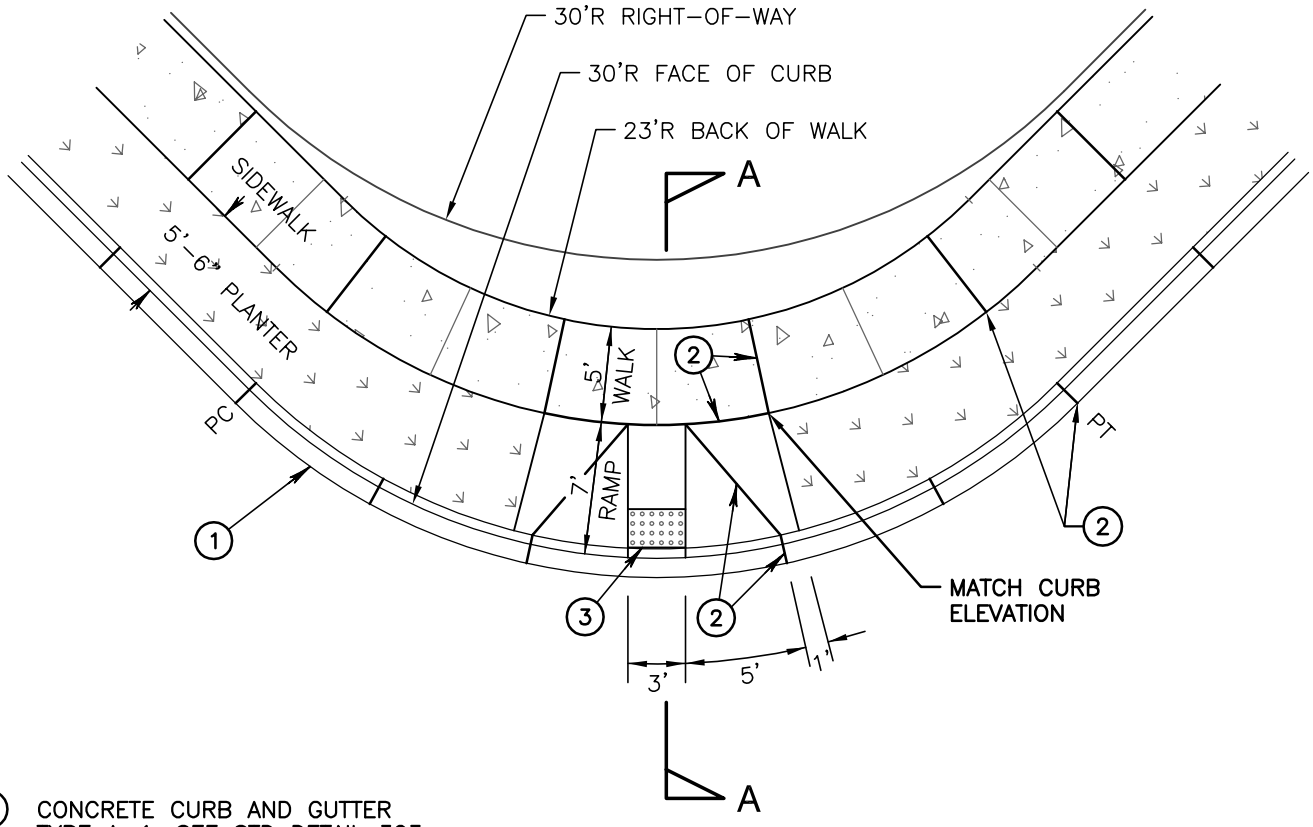

1. CONCRETE CURB AND GUTTER TYPE A-1, SEE STD DETAIL 323
2. 3/8" OR 1/2" x 2" DUMMY JOINT, SEE SECTION 3.04.
3. DETECTABLE WARNING STRIP PER ADA ACCESSIBILITY GUIDELINES 4.29.2 AND 4.29.5.

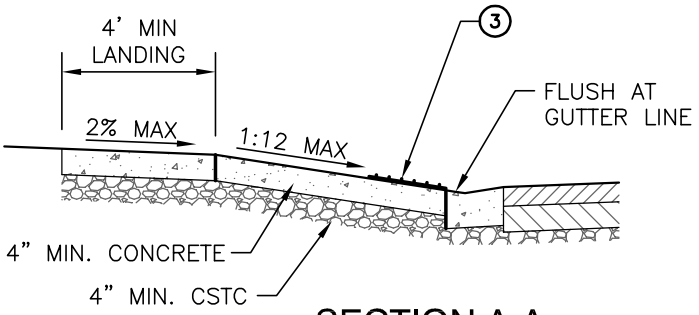

SECTION A-A

NOTES:

1. SIDEWALKS ARE 5' TO 8' WIDE. SEE STANDARD DETAILS 202 – 207 FOR EXACT DIMENSIONS.
2. CURB RAMP CONCRETE SHALL BE 4" MIN. THICK AND SHALL BE PLACED ON 4" MIN. OF 5/8" MINUS CRUSHED SURFACING TOP COURSE COMPACTED TO 95% MAXIMUM DENSITY.
3. CURB RAMPS SHALL BE CLASS 4000 CEMENT CONCRETE WITH AIR ENTRAINMENT (4% MIN. 8% MAX.).
4. CURB RAMP CONCRETE FINISH SHALL BE BRUSHED TRANSVERSELY,
5. CURB RAMP JOINTS SHALL BE TOOLED WITH A 1/4"-R EDGER. EDGES SHALL BE TOOLED WITH A 1/2"-R EDGER.
6. FINISHED CURB RAMPS SHALL BE SPRAYED WITH A TRANSPARENT CURING COMPOUND COVERED BY WATERPROOF PAPER OR PLASTIC SHEETING IN THE EVENT OF RAIN FOR A MINIMUM OF 72 HOURS.
7. NO CATCH BASINS, METER BOXES, MANHOLES OR CLEANOUTS SHALL BE LOCATED WITHIN THE CURB RAMP WIDTH.

City of Covington

Public Works

Community Development

DONALD M. VONDRAN
STATE OF WASHINGTON
38844
REGISTERED PROFESSIONAL ENGINEER

WHEELCHAIR RAMP
TYPE B

This document has been signed electronically in accordance with WAC 196-23-070 and Chapter 19.34 RCW. Unauthorized alteration of any of the information on this document will invalidate the document, my certification and signature.

309

Revision Date
October 2009