RAILING OPENING LIMITS:

Ⓐ A 4" DIA. SPHERE CAN NOT PASS THROUGH

Ⓑ A 6" DIA. SPHERE CAN NOT PASS THROUGH

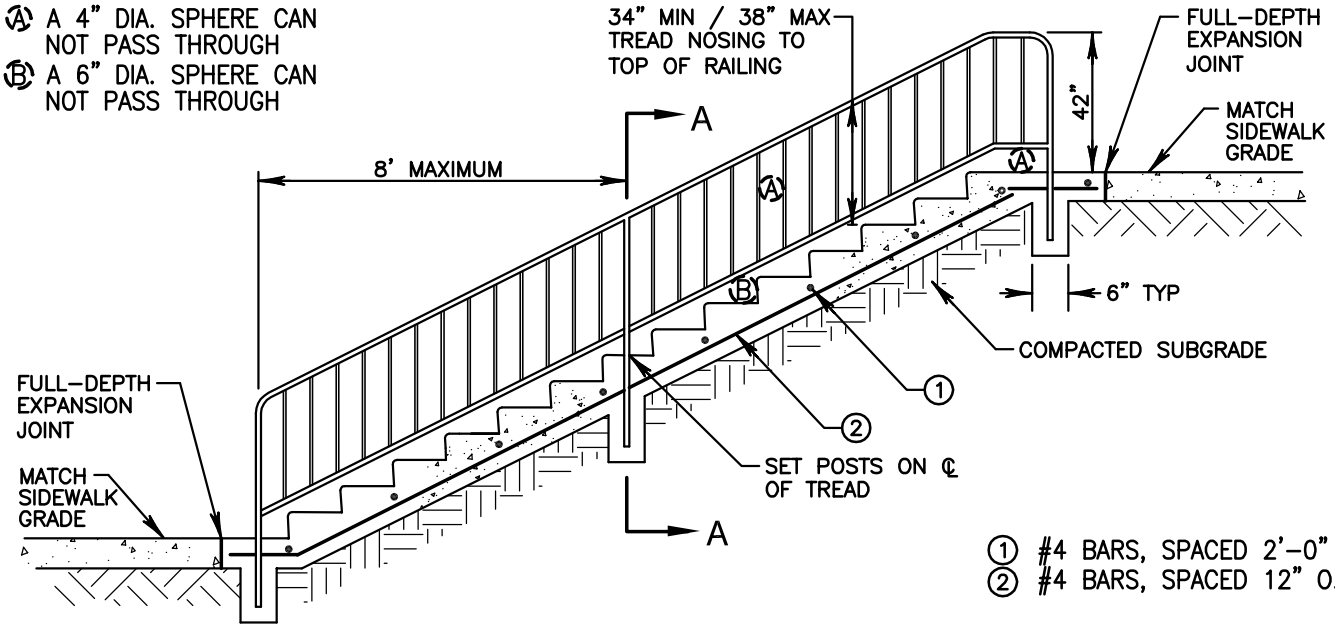

① #4 BARS, SPACED 2'-0" O.C.
② #4 BARS, SPACED 12" O.C.

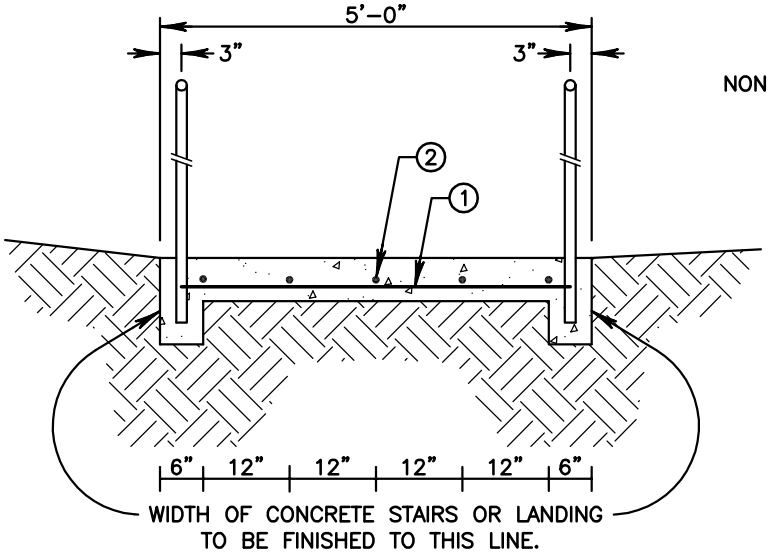

SECTION A-A

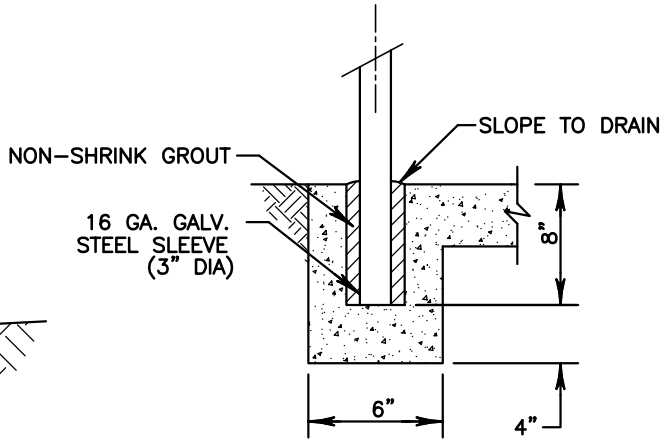

POST DETAIL

NOTES:

1. CEMENT CONCRETE STEPS SHALL BE CONSTRUCTED AS SHOWN ON DETAIL 319.
2. HEIGHT OF RAILING SHALL BE 34" MINIMUM, 38" MAXIMUM TREAD NOSING TO TOP OF RAILING.
3. PEDESTRIAN RAILING SHALL BE CONSTRUCTED AS SHOWN ON DETAILS 316 AND 317.
4. ALL STEPS SHALL HAVE HANDRAIL ON BOTH SIDES.

City of Covington

Public Works

Community Development

DONALD M. VONDRAN — STATE OF WASHINGTON — 38844 — REGISTERED PROFESSIONAL ENGINEER

CEMENT CONCRETE STAIRWAY CONSTRUCTION DETAILS

This document has been signed electronically in accordance with WAC 196-23-070 and Chapter 19.34 RCW. Unauthorized alteration of any of the information on this document will invalidate the document, my certification and signature.

318

Revision Date July 2009